January 24, 2025

Reference: CSIO/MSSA/HCP0057/197

Subject: Call for Expression of Interest (EoI)/quotation for the purchase of goods/fabrication job work for the ongoing project activities- reg

It is informed that following items are proposed to be purchased /fabricated. Interested parties are requested to **submit quotation** through email/hard copyto the undersigned **within next three days** from the date of publishing of notice.

Items/Goods/Job work required

Sr. No.	Description of the items/Goods/Jobwork	Quantity
1.	**Custom Fabrication of PCBs for different sensors and components assembly as per attached (Annexure-I)**	**as per Annexure-I**

Terms and Conditions:

Delivery: For CSIR-CSIO, Chandigarh
Lead time/delivery time: 2-3 weeks
Payment: After delivery and successful inspection

Dr Babankumar S. Bansod
Senior Principal Scientist & Project Leader
9888520252; scientist_babankumar@csio.res.in

HEAD ISD, with a request to display on the CSIO website

FABRICATION OF ITEMS AS PER -ANNEXURE 1

S.NO	DESCRIPTION	Quantity
1.	Custom PCB Fabrication pH sensor with components *PCB Dimensions: 50.00mm x 65.00 mm* *Blank PCB*	1 Unit 4 Units
2.	Custom Amperometric_Sensor PCB with components *Dimensions: 30.00 x 30.00 or Dia 30mm* *Blank PCB*	1 Unit 4 Units
3.	Custom Fabrication Color sensor with mechanical components a) Cuvette Setup for Colour Sensor *Dimensions: 40.00 x 41.50 x 74.00* b) Main PCB for colour sensor with components *PCB Dimensions: 120.00mm x 80.00 mm* *Blank PCB* c) LED PCB 1 *PCB Dimensions: 25.40mm x 17.78 mm* *Blank PCB* d) LED PCB 2 *PCB Dimensions: 25.40mm x 17.78 mm* *Blank PCB* e) LED PCB 3 *PCB Dimensions: 25.40mm x 17.78 mm* *Blank PCB*	1 Unit 1 Unit 4 units 1 Unit 4 Units 1 unit 1 Unit 4 Units
4.	Custom Corner Cut Fluoride Sensor PCB *PCB Dimensions: 50.80 x 109.35 mm*	5 Units

pH sensor with components

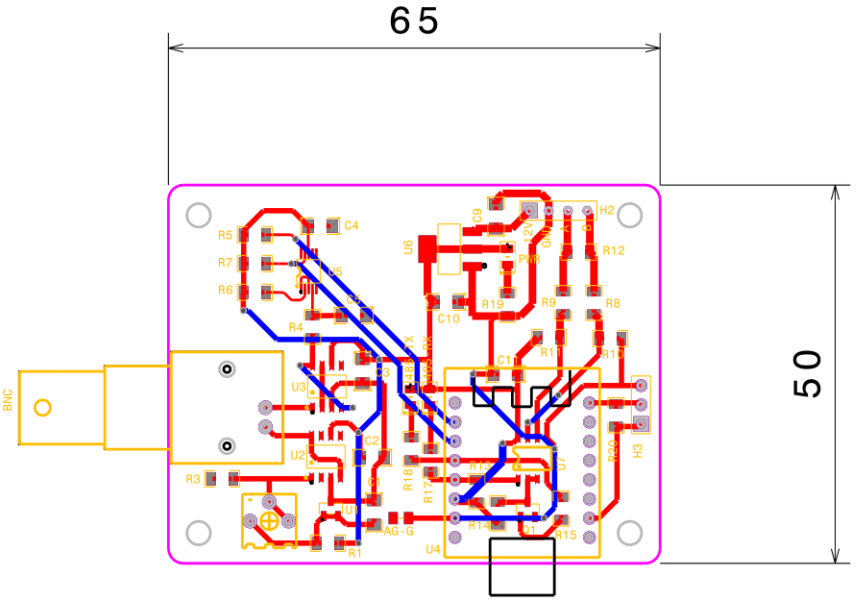

ID	Name	Designator	Footprint
1	100	R4	R1206
2	ADS1115IDGST	U5	VSSOP-10_L3.0-W3.0-P0.50-LS4.9-BL
3	1-1337543-0	BNC	BNC-TH_1-1337543-0
4	0.1u	C1,C2,C3,C4,C5,C11	C1206
5	10u	C9,C10	C1206
6	RS485	H2	HDR-F-2.54_1X4
7	DS18B20	H3	HDR-F-2.54_1X3
8	LED-0805_R	485-RX,485-TX,PWR	LED0805_RED
9	MMBT2222ALT1G	Q1	SOT-23-3_L2.9-W1.3-P1.90-LS2.4-BR
10	TL431BIDBZR	U1	SOT-23-3_L2.9-W1.3-P1.90-LS2.4-BR
11	1k	R1	R1206
12	10k	R3,R5,R6,R7	R1206
13	10	R8,R9	R1206
14	4.7K	R10,R11,R13,R14,R15,R20	R1206
15	120	R12	R1206
16	1K	R17,R18,R19	R1206
17	20KΩ	R2	RES-ADJ-TH_3362P
18	LMP7721MAX/NOPB	U2,U3	SOIC-8_L4.9-W3.9-P1.27-LS6.0-BL
19	DFR1117 Beetle ESP32 C6 Mini	U4	BEETLE BOARDS THT
20	AMS1117-5.0RG	U6	SOT-223-3_L6.4-W3.5-P2.30-LS7.0-BR
21	MAX485ECSA-T	U7	SOIC-8_L5.0-W4.0-P1.27-LS6.0-BL

Amperometric_Sensor PCB with SMD components

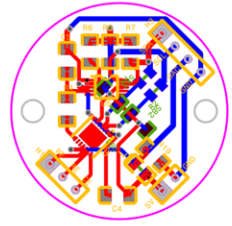

ID	Name	Designator
1	10k	R1,R2,R5,R6,R7
2	HDR-F-2.54_1x2	5V
3	LED-0805_R	L
4	0.1u	C4,C5
5	ELECTRODE CONNECTION	H1
6	HDR-F-2.54_1x4	H3
7	100	R4
8	1K	R19
9	LMP91000SDE/NOPB	U2
10	ADS1115IDGST	U5
11	1-1337543-0	BNC
12	0.1u	C1,C2,C3,C4,C5,C11
13	10k	R3,R5,R6,R7
14	4.7K	R10,R11,R13,R14,R15,R20

Cuvette Setup for Colour Sensor

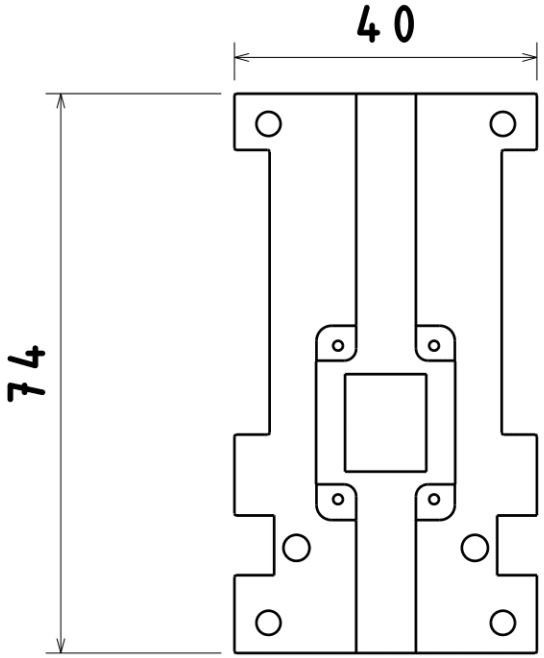

Bottom view
Scale: 1:1

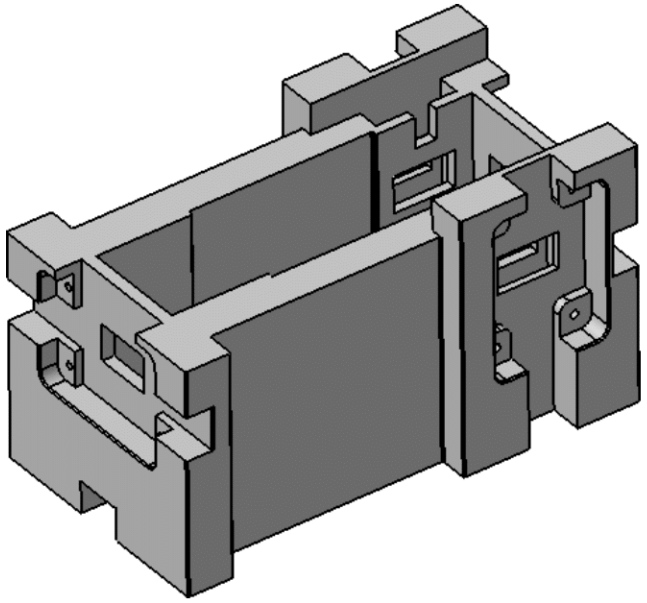

Isometric view
Scale: 1:1

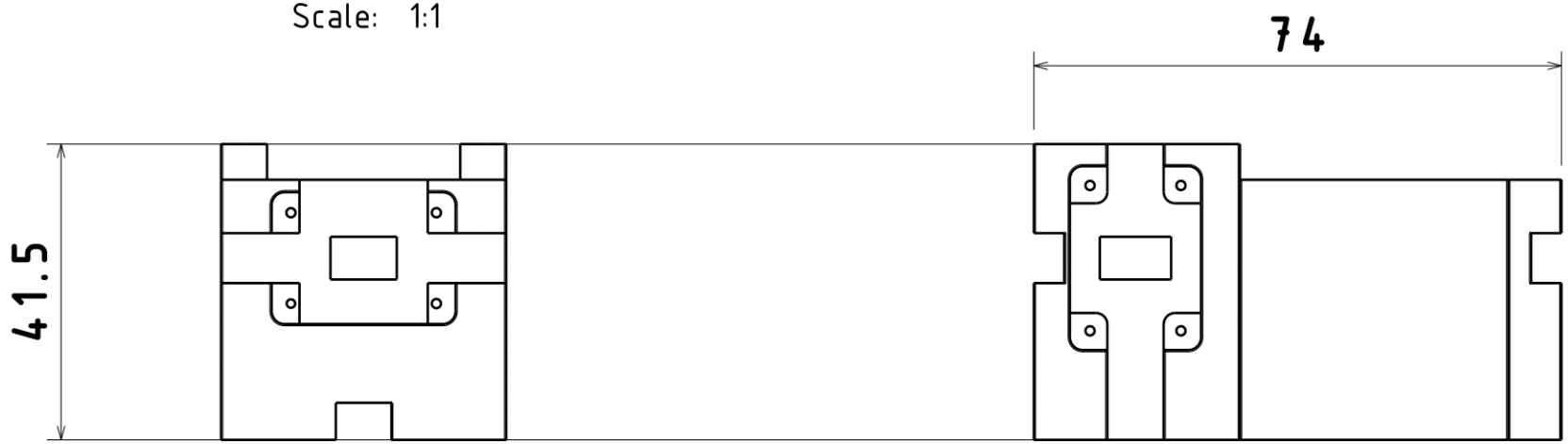

Front view
Scale: 1:1

Left view
Scale: 1:1

Main PCB for colour sensor with components

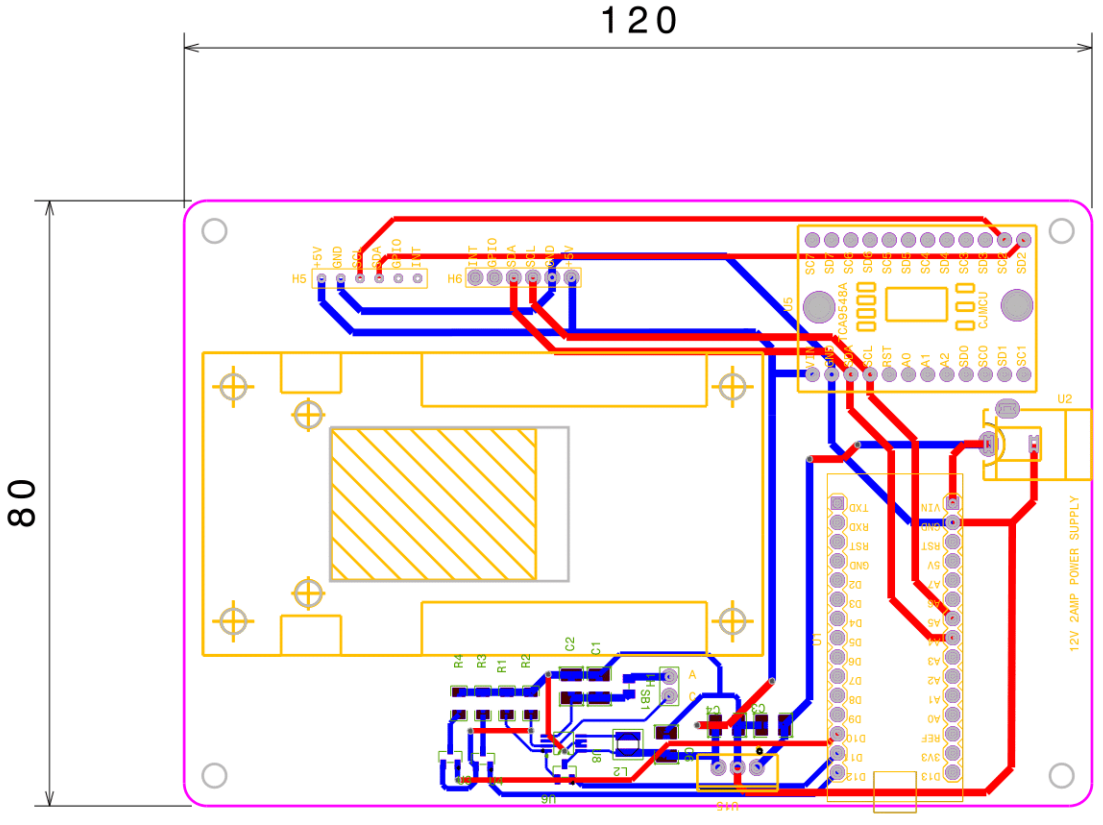

ID	Name	Designator	Footprint
1	Adafruit AS7341	H5,H6	HDR-F-2.54_1X6
2	ARDUINO_NANO	U1	COMM-TH_ARDUINO_NANO
3	POWER-JACK	U2	DC-IN-TH_POWER-JACK
4	L7805CV-DG	U15	TO-220-3_L10.0-W4.5-P2.54-L
5	cjmcu tca9548a	U5	CJMCU-TCA9548A
6	HDR-F-2.54_1x2	H1	HDR-F-2.54_1X2
7	DMN2050L	U3,U4,U6	SOT-23-3_L2.9-W1.3-P1.90-LS2.4-BR
8	MCP1643T-I/MS	U8	MSOP-8_L3.0-W3.0-P0.65-LS4.9-BL
9	744025004	L2	WE-TPC_282892
10	C1210	C1,C2,C3,C4,C6	C1210
11	1m	R1	R1206
12	2.4	R2	R1206
13	4.7	R3,R4	R1206

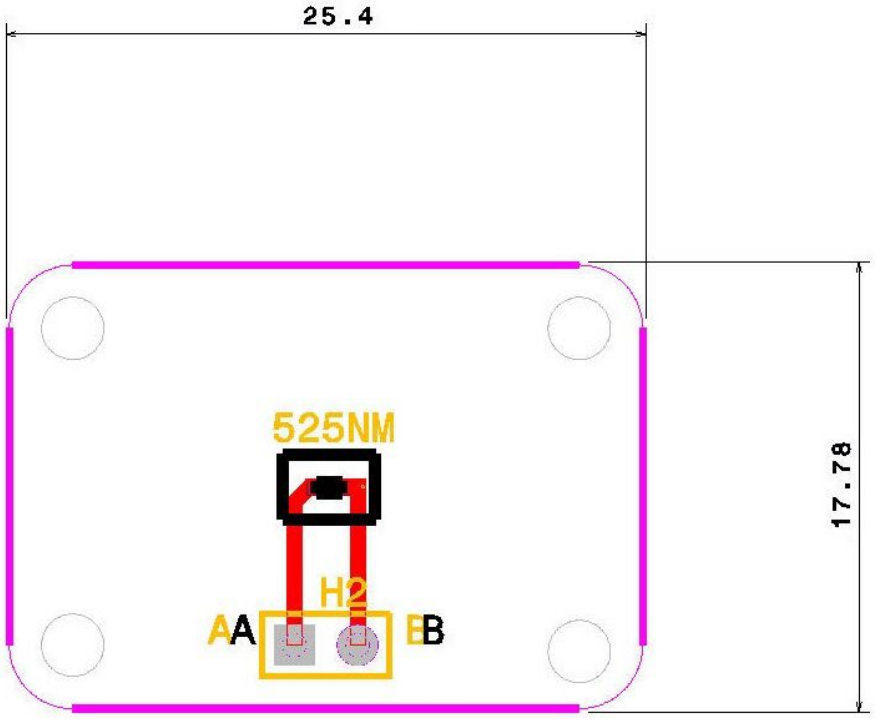
25.4
525NM
H2
AA
BB
17.78

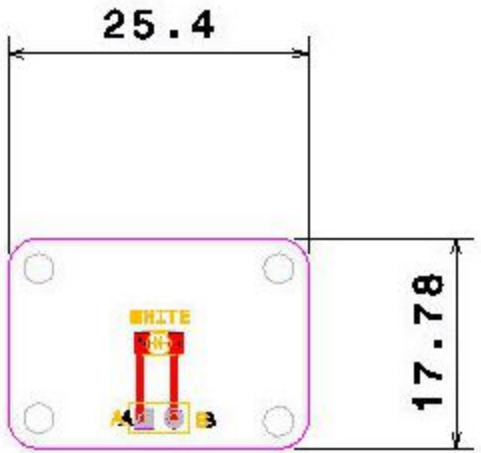
25.4
17.78
WHITE
A
B

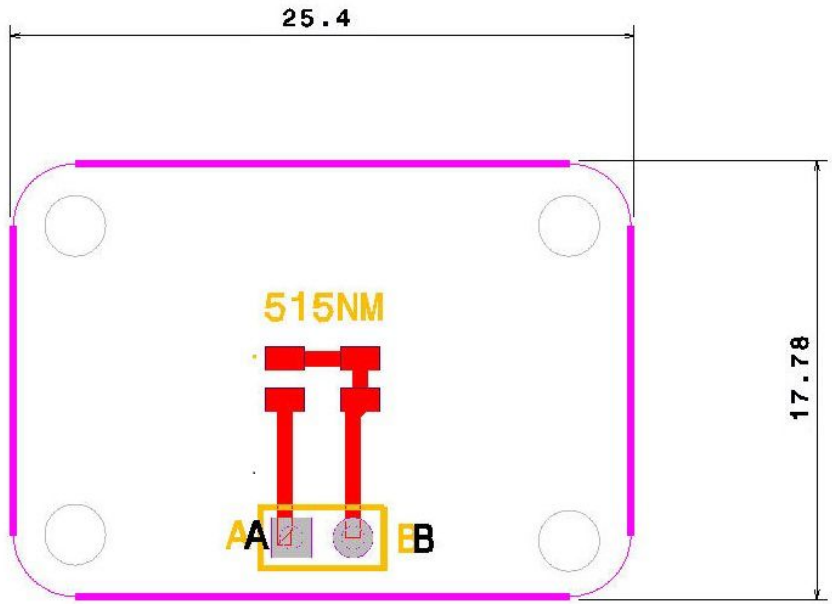
25.4
515NM
A
B
17.78

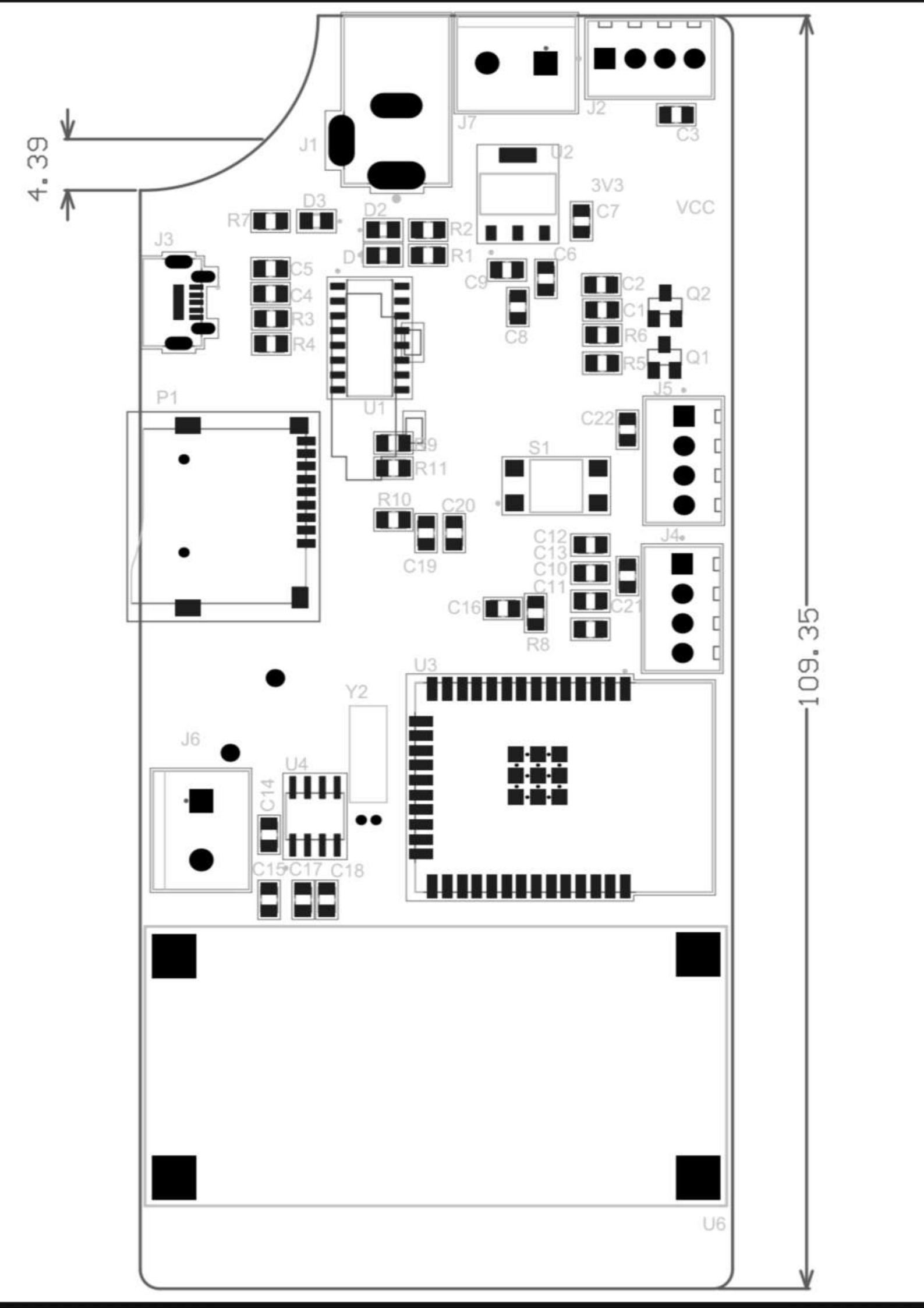
4.39
109.35
J1
J7
J2
C3
U2
3V3
VCC
C7
D3
R7
D2
R2
D1
R1
C6
J3
C5
C4
R3
R4
C9
C8
C2
C1
R6
R5
Q2
Q1
U1
P1
J5
C22
R9
R11
S1
R10
C20
C19
C12
C13
C10
C11
C21
J4
C16
R8
U3
Y2
J6
U4
C14
C15
C17
C18
U6

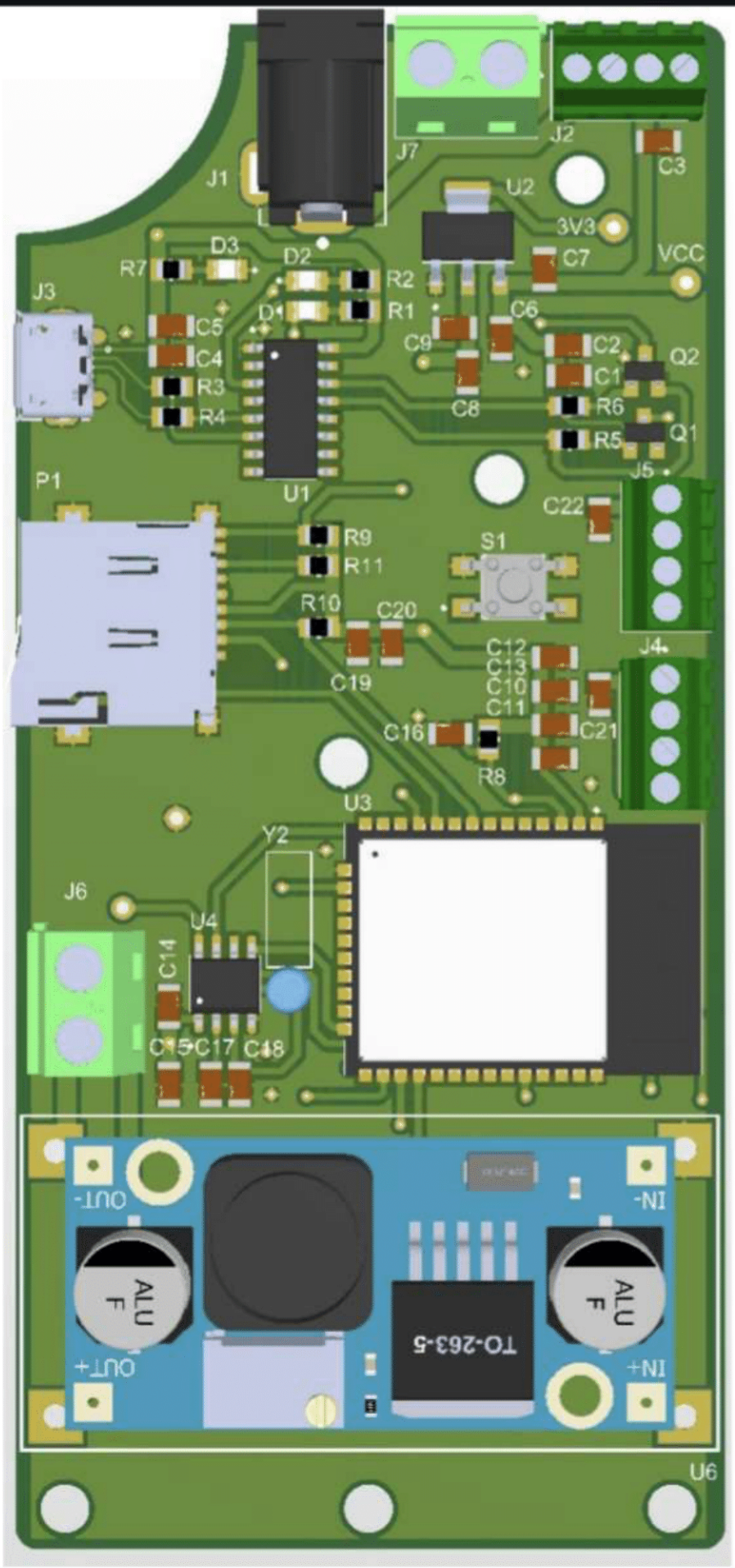
J1
J7
J2
U2
C3
3V3
C7
VCC
D3
D2
R7
R2
R1
D1
J3
C5
C4
R3
R4
C6
C9
C8
C2
C1
R6
R5
Q2
Q1
J5
P1
U1
C22
R9
R11
S1
R10
C20
C19
C12
C13
C10
C11
C21
J4
C16
R8
U3
Y2
J6
U4
C14
C15
C17
C18
OUT-
OUT+
IN-
IN+
ALU
F
TO-263-5
U6